140L-DX

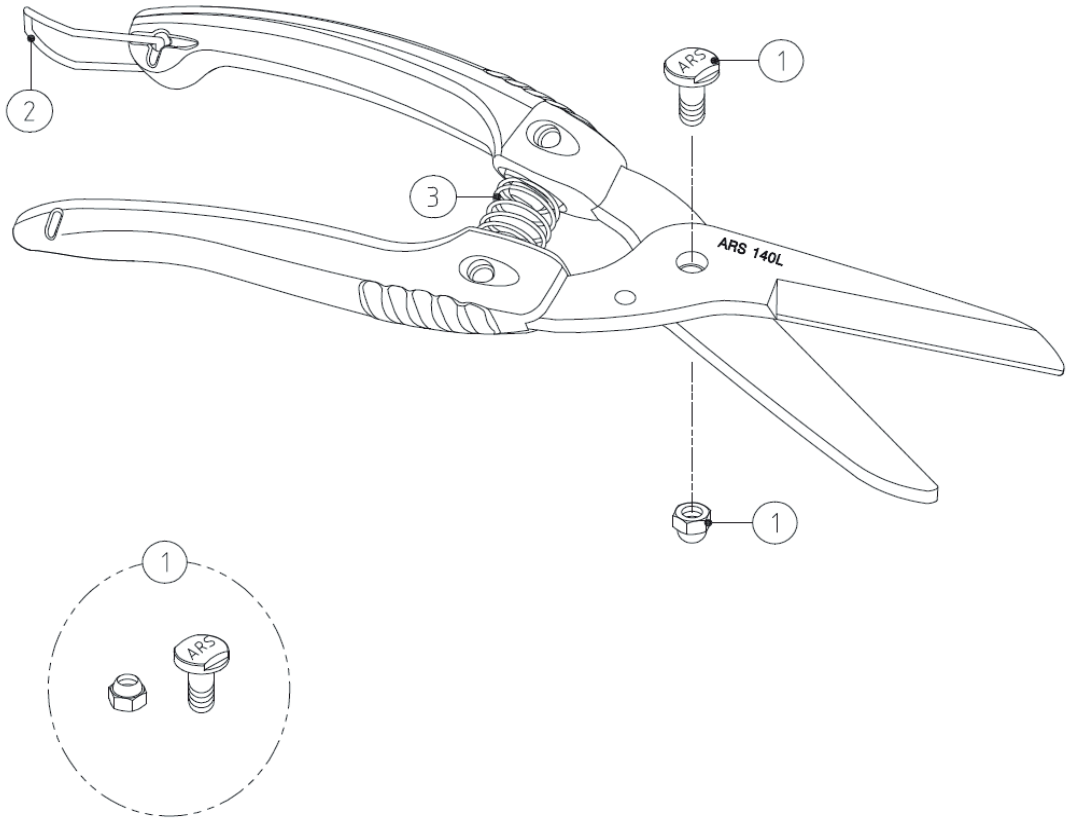

PARTS NO.	SPECIFICATION	PARTS NO.	SPECIFICATION
① SP-14	BOLT & NYLON NUT FOR 120/130/140/		
	140L/DX/B,120EU/EU-R		
② SP-16	STEEL HOOK FOR 120DX/B/DX-T,140L-DX		
③ SP-61	SPRING FOR 130DX, 140DX, 140L-DX, VS,		
	& VS-X SERIES		