120EU-R

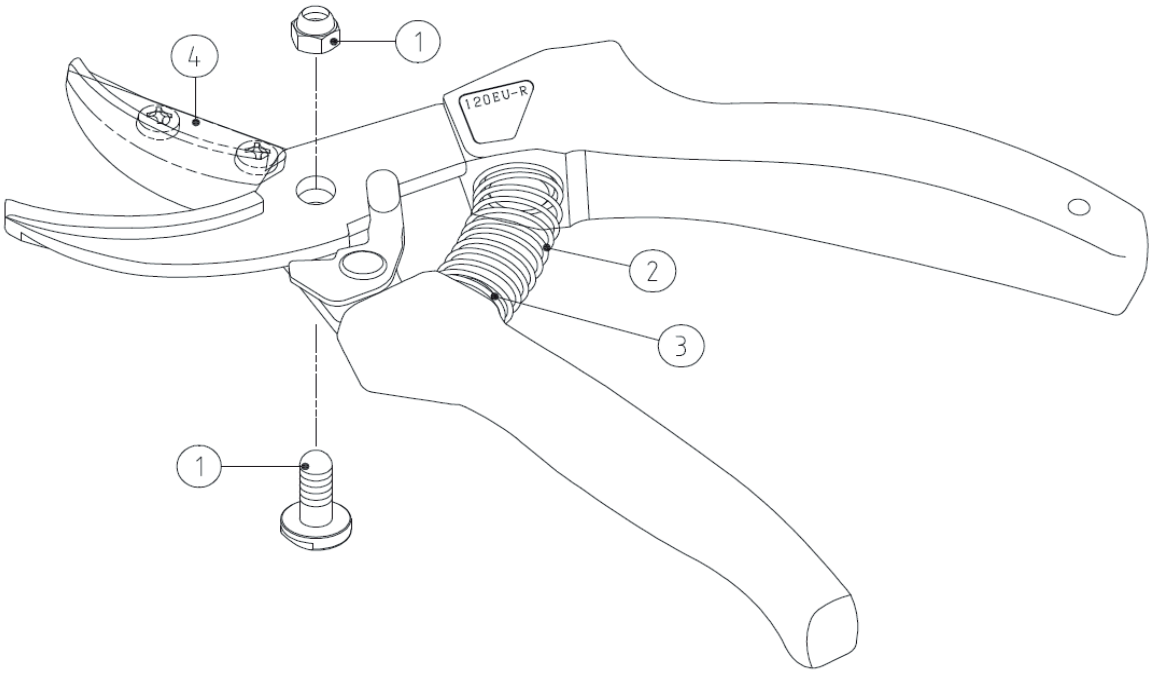

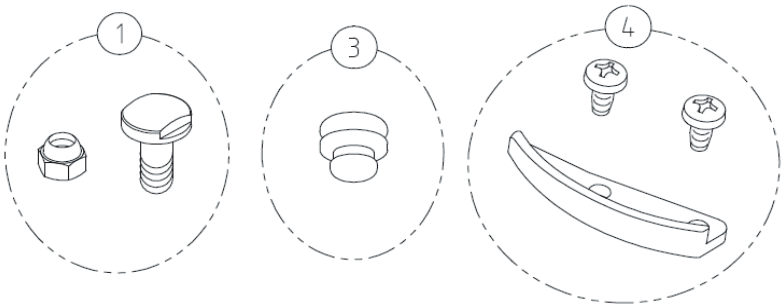

PARTS NO.	SPECIFICATION	PARTS NO.	SPECIFICATION
① SP-14	BOLT & NYLON NUT FOR 120/130/140/		
	140L/DX/B,120EU/EU-R		
② SP-157	SPRING FOR 120EU/120EU-R		
③ SP-70	SHOCK ABSORBER FOR 130/140/12OEU SERIES		
	(1PC)		
④ SP-322	HOLDING DEVICE WITH 2 SCREWS FOR		
	CUTTING BLADE OF 120EU-R		