180LR-1.2/1.8/2.1

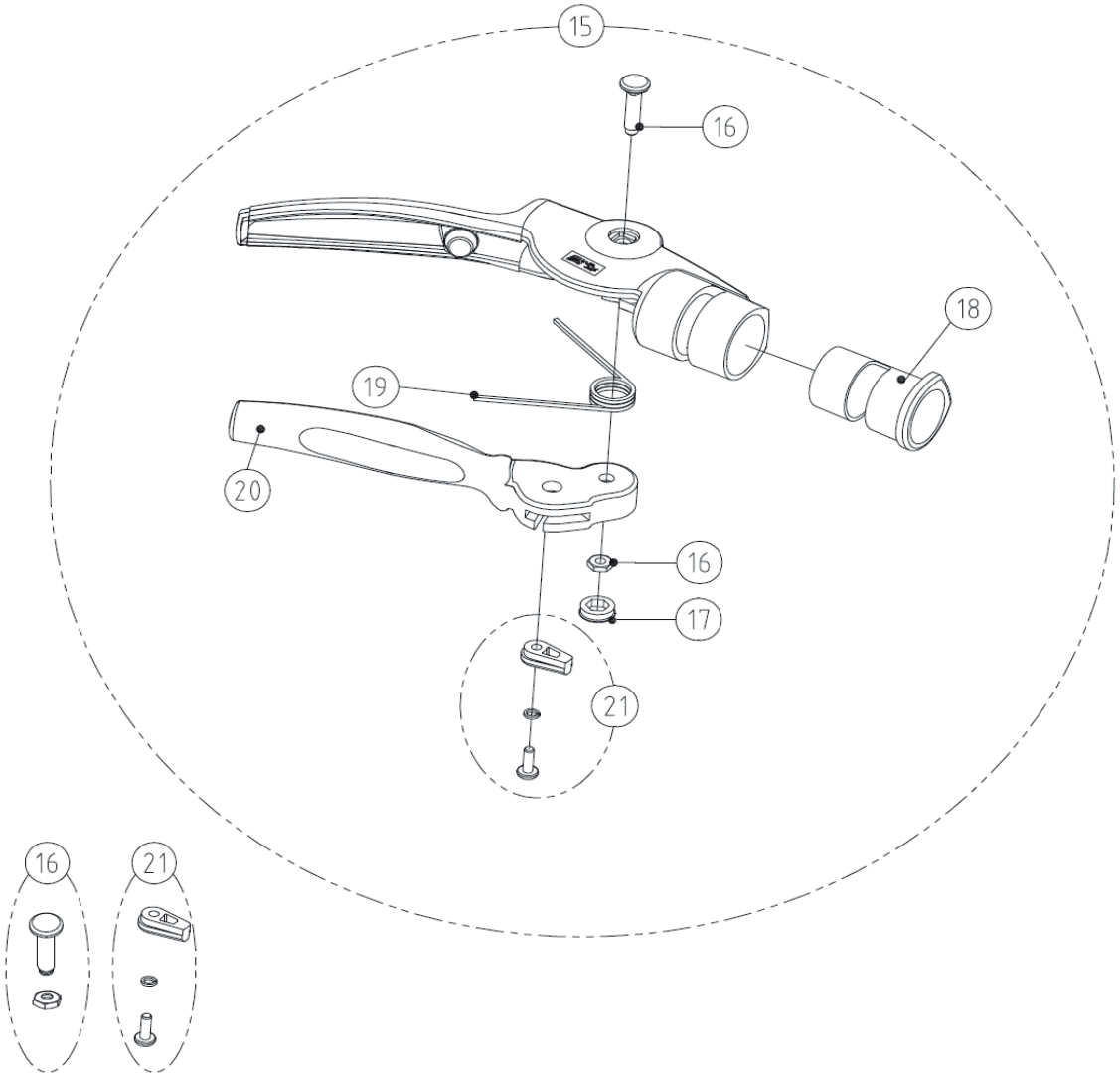

PARTS NO.	SPECIFICATION	PARTS NO.	SPECIFICATION
⑮ SP-348	GRIP SET FOR ZR/ZF/160R/180R/180LR SERIES		
⑯ SP-379	CENTER BOLT & NUT FOR GRIP OF ZR/ZF/160R/		
	180R/180LR SERIES		
⑰ SP-414	NUT CAP FOR THE HANDLE OF ZR/ZF/160R/		
	180R/180LR SERIES		
⑱ SP-339	SLEEVE FOR THE GRIP OF ZR/ZF/160R/180R/		
	180LR SERIES		
⑲ SP-41	SPRING FOR LONG REACH PRUNER		
	(INC ZR SERIES,150-0.6) (1 PC)		
⑳ SP-349	GRIP LEVER ONLY FOR ZR/ZF/160R/180R/		
	180LR SERIES		
㉑ SP-380	HANDLE LATCH LOCK SET FOR ZR/ZF/160R/		
	180R/180LR SERIES		