UV-40

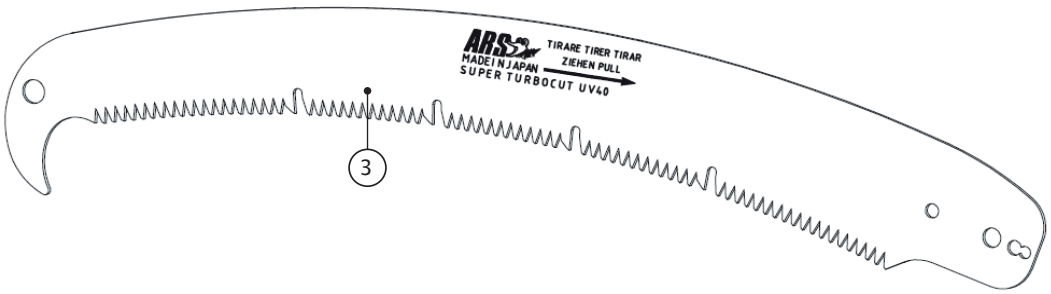

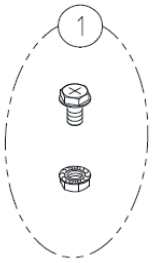

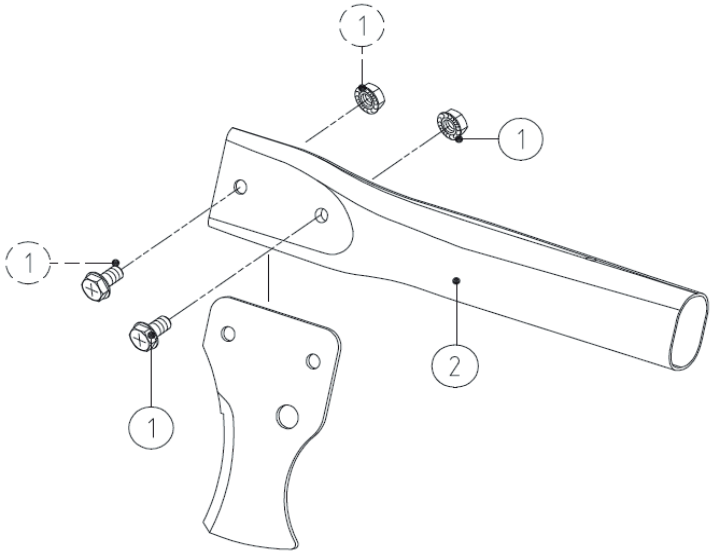

PARTS NO.	SPECIFICATION	PARTS NO.	SPECIFICATION
① SP-146	BOLT & NUT FOR CT/UV-32PRO-EXP/-34,		
	UV-40/-47,JG-1/-2/-3		
② JG-1 EX	GRIP ONLY, FOR UV-40 & 47 W/BOLT & NUT		
JG-2 EX	GRIP ONLY, FOR UV/CT-34 &		
	UV/CT-32PRO-EXP		
JG-3 EX	GRIP ONLY, FOR UNIVERSAL ROUND POLE		
JG-4 EX	GRIP ONLY, FOR APPLICATION OF UNIVERSAL		
	POLE LOPPERS		
③ ARSUV-40-1	SPARE BLADE		