TL-24 / TL-27 / TL-30

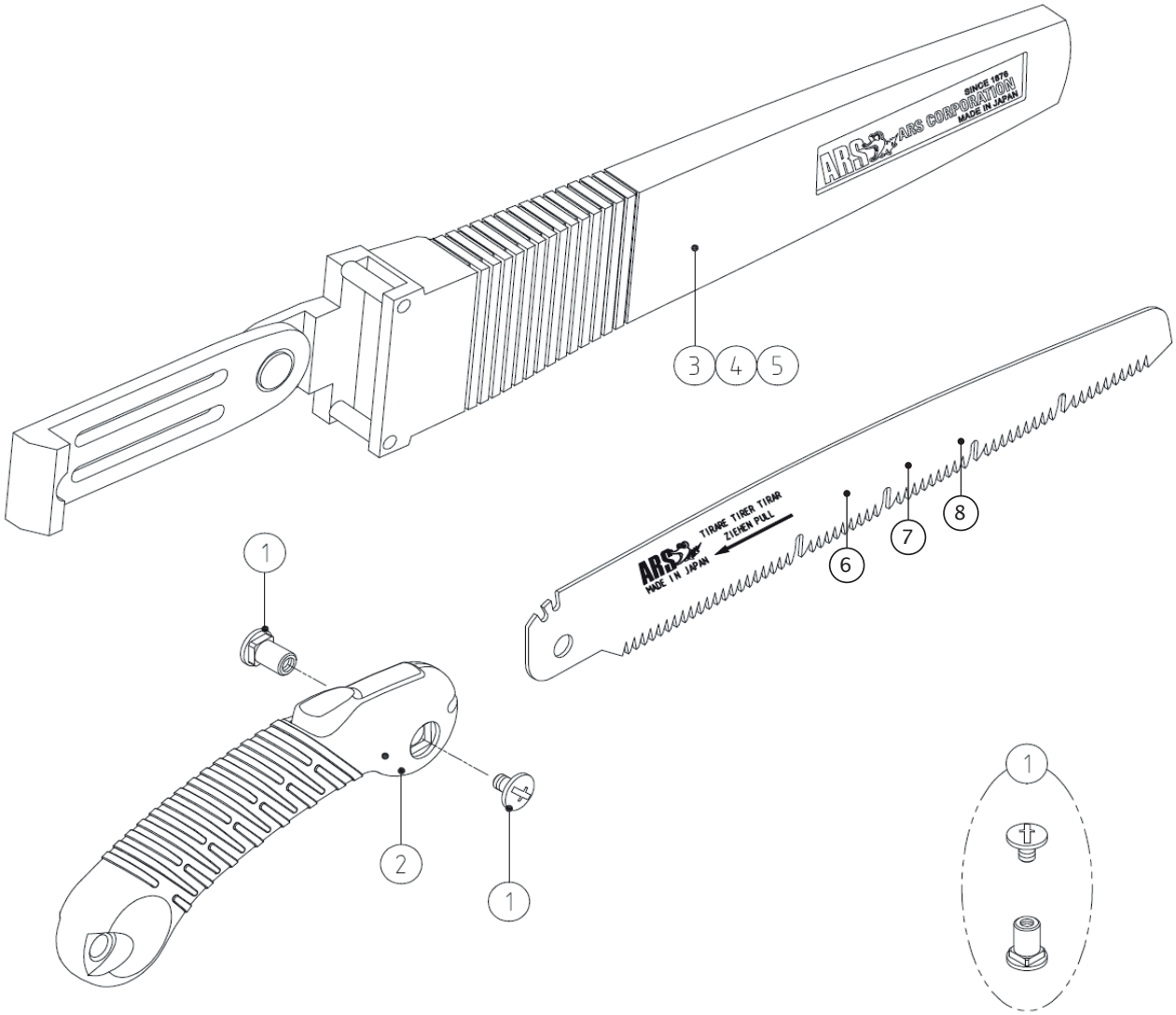

PARTS NO.	SPECIFICATION	PARTS NO.	SPECIFICATION
① SP-50	BOLT & NUT FOR TL-24/27/30		
② SP-289	GRIP FOR TL-24/27/30		
③ SP-274	SHEATH FOR TL-24		
④ SP-286	SHEATH FOR TL-27		
⑤ SP-287	SHEATH FOR TL-30		
⑥ ARSTL-24-1	SPARE BLADE		
⑦ ARSTL-27-1	SPARE BLADE		
⑧ ARSTL-30-1	SPARE BLADE		