PS-32LL

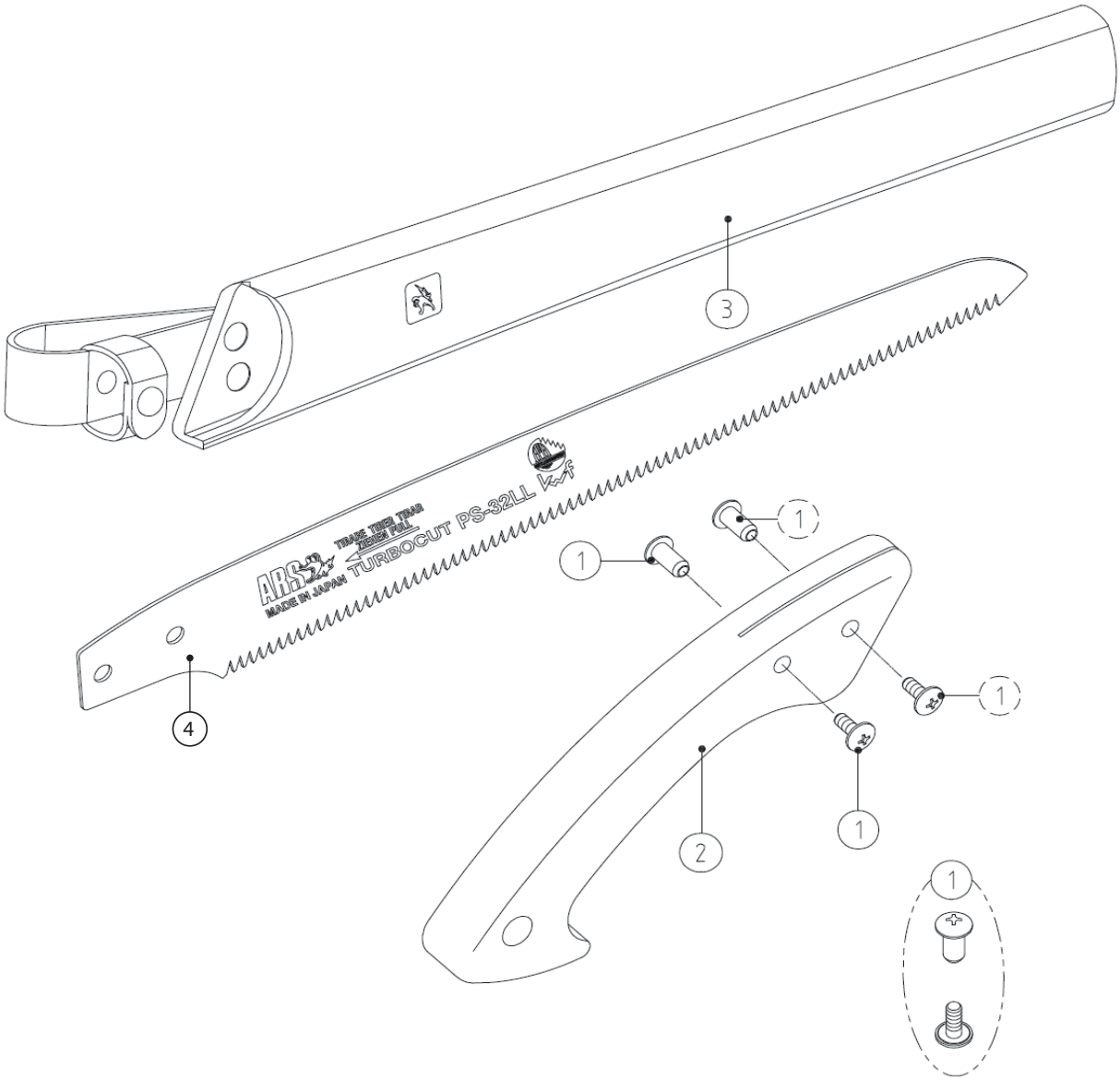


| PARTS NO. | SPECIFICATION | PARTS NO. | SPECIFICATION |
|---|---|---|---|
| ① SP-94 | BOLT & NUT FOR PS-32L/LL (1PC EACH) | | |
| ② SP-321 | WOODEN GRIP FOR PS-32L/LL | | |
| ③ SH-32 EX | SHEATH FOR PS-30KL | | |
| ④ ARS32LL-1 | SPARE BLADE | | |