LP-40

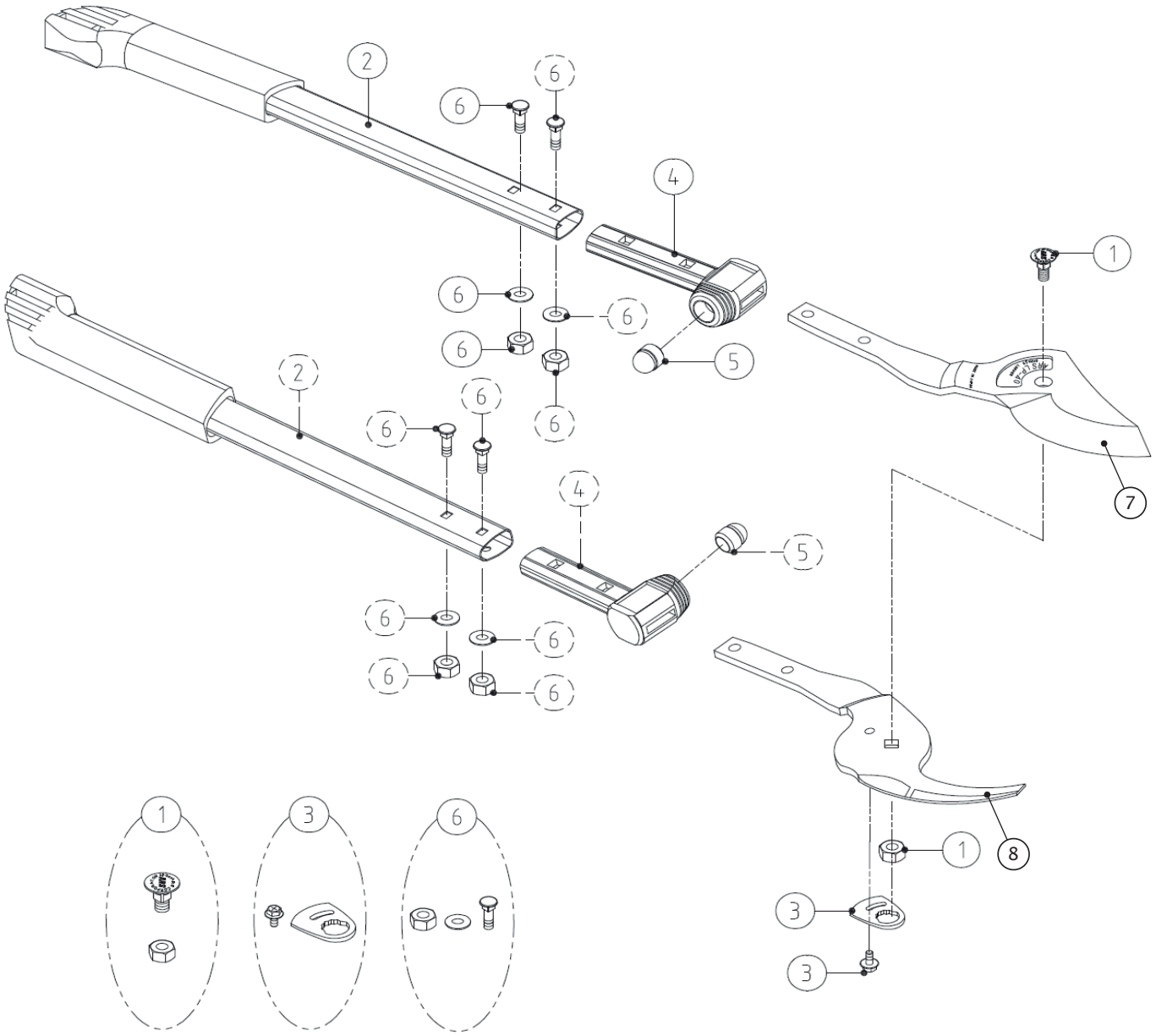

PARTS NO.	SPECIFICATION	PARTS NO.	SPECIFICATION
① SP-278	CENTER BOLT & NUT FOR LP-40 & LPA-30L		
② SP-282	PIPE FOR LP-40 WITH GRIP (1PC)		
③ SP-245	SCREW RETAINER SET FOR LP-40		
④ SP-280	BUMPER SOCKET FOR LP-40 (1PC)		
⑤ SP-250	SHOCK ABSORBER FOR LP-40 (1PC)		
⑥ SP-281	BLADE HOLDING BOLT,WASHER & NUT FOR		
	LP-40 (1PC EACH)		
⑦ ARSLP-40-1	REPLACEMENT CUTTING BLADE		
⑧ ARSLP-40-2	REPLACEMENT COUNTER BLADE		