K-900Z

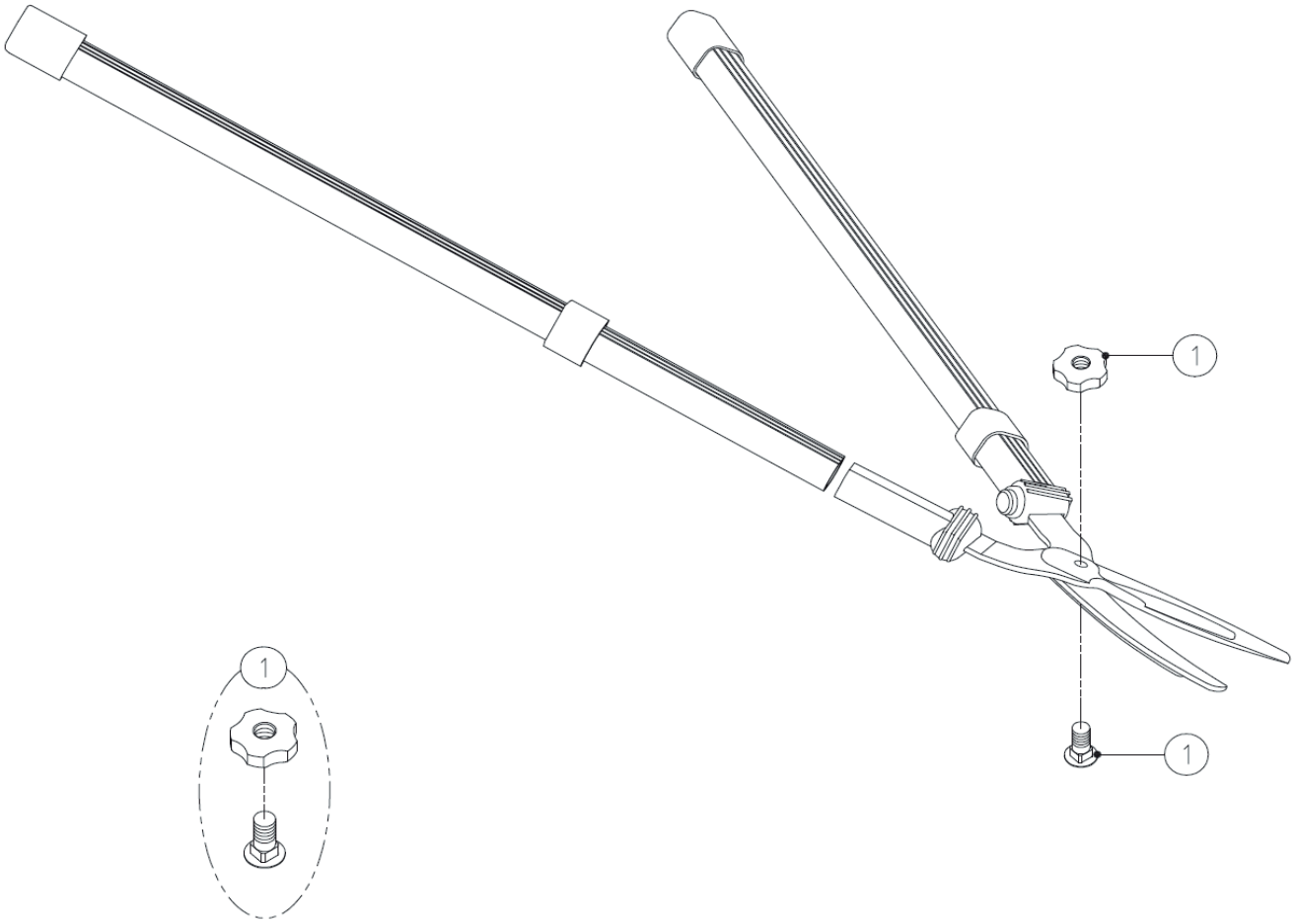

PARTS NO.	SPECIFICATION	PARTS NO.	SPECIFICATION
① SP-58	BOLT & NUT FOR K-800/K-900Z/K-950Z		