300L / 300SS / 300L-DX

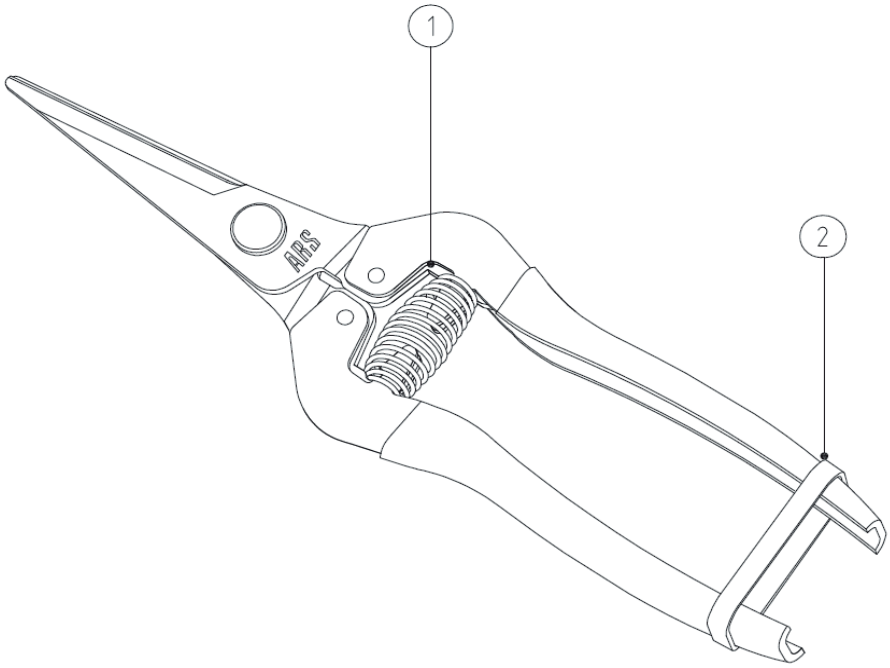

PARTS NO.	SPECIFICATION	PARTS NO.	SPECIFICATION
① SP-23	SPRING FOR 300L/SS, 310/-T/-D/DX		
② SP-161	STRAP FOR 310/DX/-D/-T,300L/SS,SE SERIES		